10 Watt LED Down light fitting

EO-DL- 10W

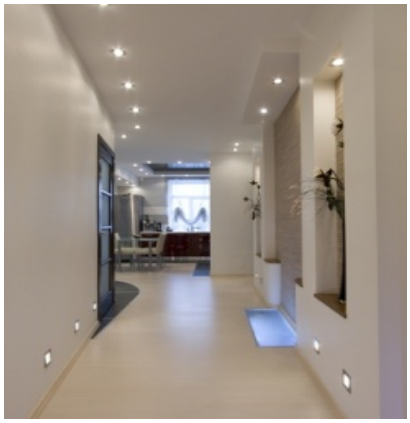

SPECIFICATIONS	
Product Code	EO-DL-10W
Power Consumption	8.8watts
Power Factor	>0.949 Pf
Operational Voltage	240v LED Driver (included) 12v Luminaire
Includes	240v flex and plug
Colour temperature	Warm White – 2900 Kelvin Cool White - 4000 Kelvin
Lumen Output	WW- 750 lumens CW – 810 lumens
Colour Rendering	>63.9 CRI
Surface Colour Available	Gloss white Brushed Silver
Beam Angle	45-60 Degree
Light Source	COB Bridgelux LED Chip
Operating Temp	-20'Cto +60'C
Installation Dia	90mm
Expected Life	50,000+ hrs
Dimmable	Triac leading edge dimmable
Compliance	Approval No: SAA110548EA N28689
Warranty	3years

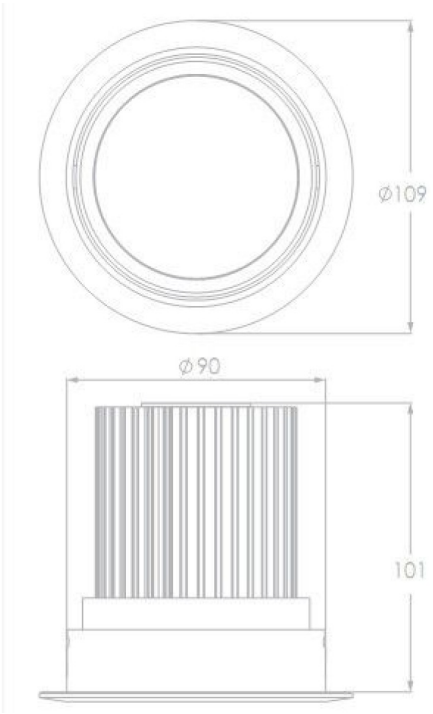

For more information visit our website: www.eolighting.com.au

© Summit LED Energy Australia Pty Ltd t/as eo lighting

Head Office Sydney: Unit 5G, 256 New Line Road, Dural, NSW, 2158
Ph: 02 9653 9909 Fax: 02 9653 9959 www.eolighting.com.au

Melbourne Canberra Brisbane
Sydney Adelaide Perth

Green Energy LED Solutions